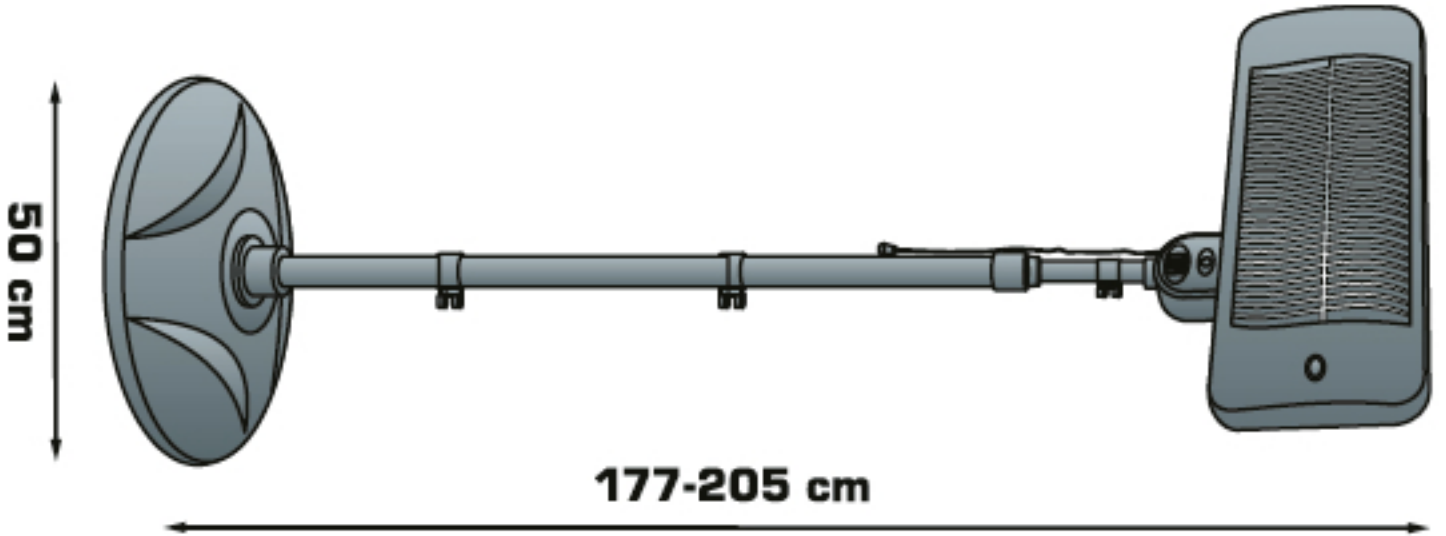
50 cm
177-205 cm