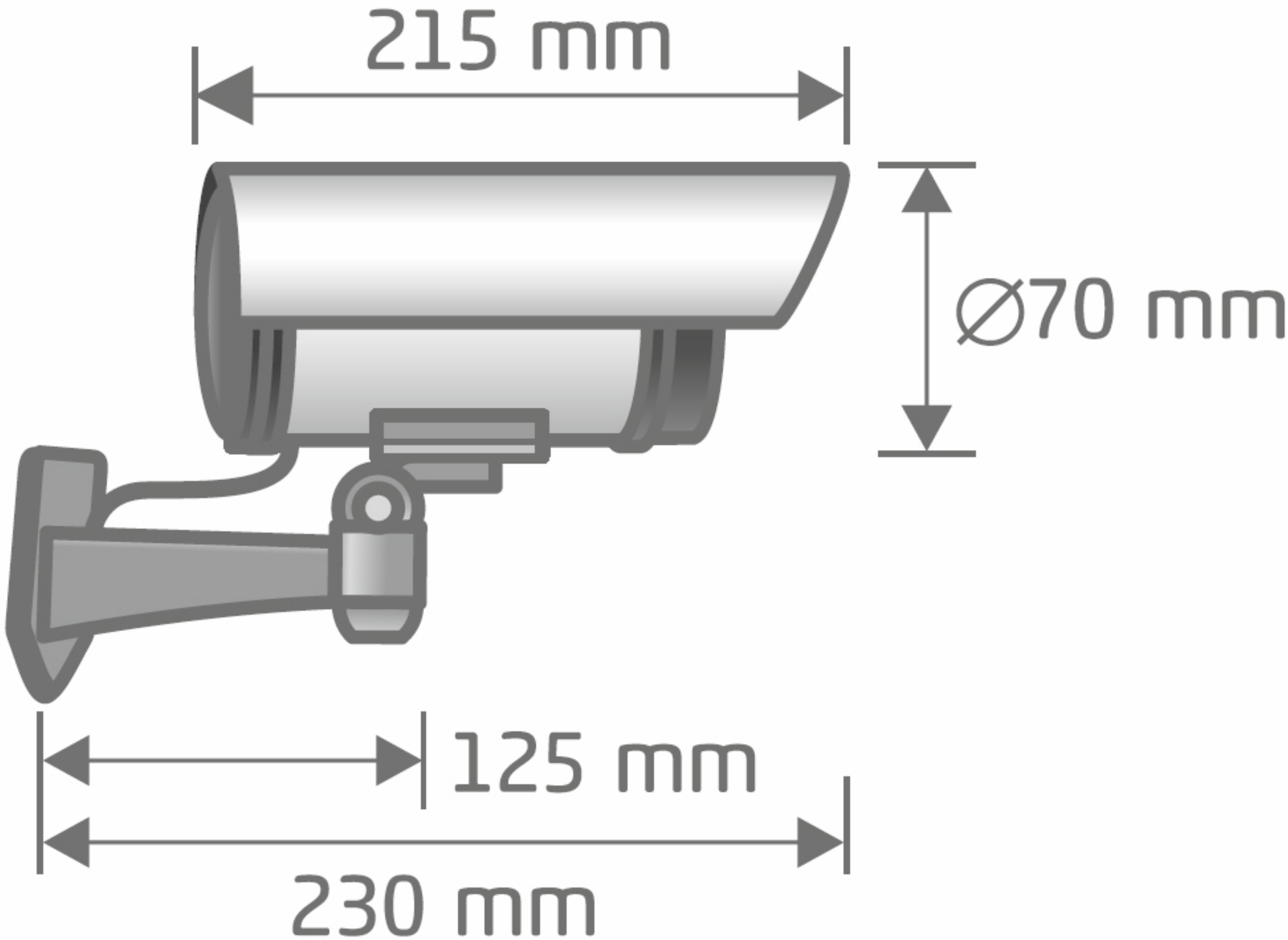
215 mm
Ø70 mm
125 mm
230 mm