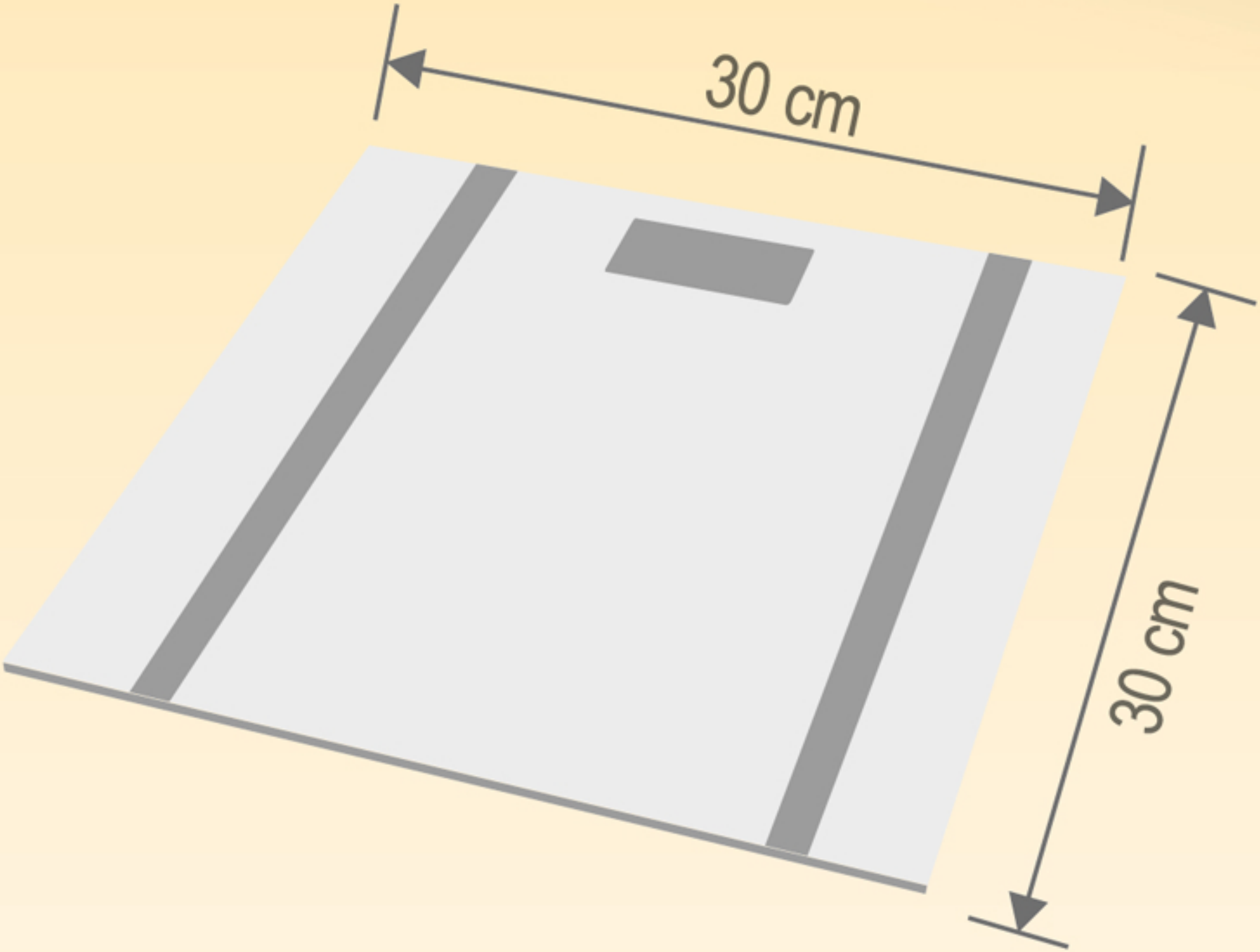
30 cm
30 cm